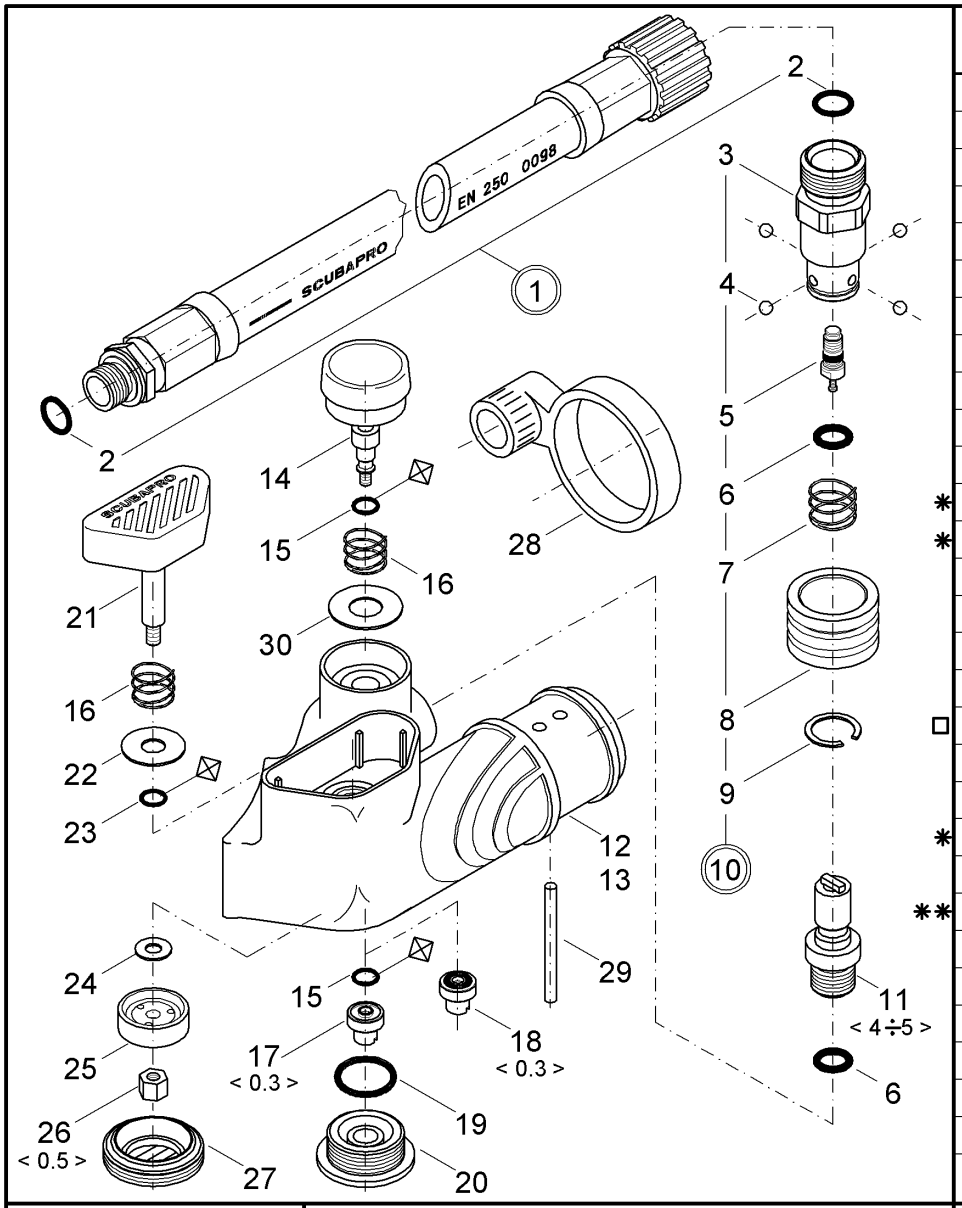

	Po.	P/N	DESCRIPTION	DESCRIZIONE	DESCRIPTION	BEZEICHNUNG
	1	01310026	L.P. HOSE cm. 65	TUBO B.P. cm. 65	TUYAU M.P. cm. 65	ND-Schlauch cm. 65
	2	01050132	O-RING	O-RING	JOINT TORIQUE	O-ring
	3	21626114	COUPLING	CORPO INNESTO	EMBOUT FEM. INFL.	Kupplungskorper
	4	01085102	BALL	SFERA	BILLE	Kugel
	5	21562106	SCHRADOR VALVE	VALVOLINA N/RIT.	VALVE INFLATEUR	Kupplungsstift
	6	01050138	O-RING	O-RING	JOINT TORIQUE	O-ring
	7	01020167	SPRING	MOLLA	RESSORT	Feder
	8	21626120	SLEEVE	MANICOTTO	MANCHON INFL.	Oeffnungsring
	9	21626121	RETAINING RING	ANELLO ARRESTO	ANNEAU DE RETEN.	Ring
	10	21626013	QUICK DISCONNECT	INNESTO RAPIDO	LARGAGE RAPIDE	Kupplung
	11	21626102	RETAINER	INNESTO MASCHIO	RACC. MALE INFL.	Kupplungsstift
✱	12	21600121	BODY, BLACK	CORPO NERO	CORPS NOIR	Gehause schwarz
✱	13	21600421	BODY, LIME	CORPO LIME	CORPS LIME	Gehause lime
	14	21626014	BUTTON, INFLATOR	PULSANTE CARICO	BOUTON INFLATEUR	Einlassknopf komplett
	15	01050117	O-RING	O-RING	JOINT TORIQUE	O-ring
	16	01020149	SPRING	MOLLA	RESSORT	Feder
	17	21626113	RETAINER SEAT	SUPPORTO VALVOLA	LOGEMENT CLAPET	Sitzhalter
□	18	21626004	SEAT INFL. (USA)			
	19	01050147	O-RING	O-RING	JOINT TORIQUE	O-ring
	20	21626103	PLUG, INFLATOR	TAPPO CARICO	ECROU INFLATEUR	Verschlusschraube
✱	21	21600016	BUTTON, EXHAUST	PULSANTE SCARICO	BOUTON EXPIRAT.	Auslassknopf
	22	01060145	WASHER	RONDELLA	RONDELLE	Scheibe
✱✱	23	01050367	O-RING	O-RING	JOINT TORIQUE	O-ring
	24	01060108	WASHER	RONDELLA	RONDELLE	Scheibe
	25	21626007	SEAT EXHAUST	VALVOLA SCARICO	SOUPAPE EXPIRAT.	Ausblasventil
	26	01121218	NUT	DADO	ECROU	Mutter
	27	21626105	PLUG, EXHAUST	TAPPO SCARICO	ECROU EXPIRAT.	Auslasschraube
	28	21082101	INLET PLUG	TAPPO INNESTO	BOUCHON INFL.	Schutz
	29	01075134	PIN	SPINA	PIVOT	Nagel
	30	01060612	WASHER	RONDELLA	RONDELLE	Scheibe

SCUBAPRO

< > Torque N·m $^{+2}_{-0}$

[ ] Torque lb·in $^{+18}_{-0}$

⊕ Annual replacement

BALANCED POWER INFLATOR

CAT. NO. 21-600-X00

CONFIG. 8 | DATE 05/2004

REV. F | Position 2: deleted annual replacement

□ USA Configuration

✱ Parts not interchangeable with the BPI ones, 'old' config. (21626000)

✱✱ On the EU production, 01-050-126 can be used too

CHECKED